TERMINALS OF ECU

1. COMBINATION METER ASSEMBLY

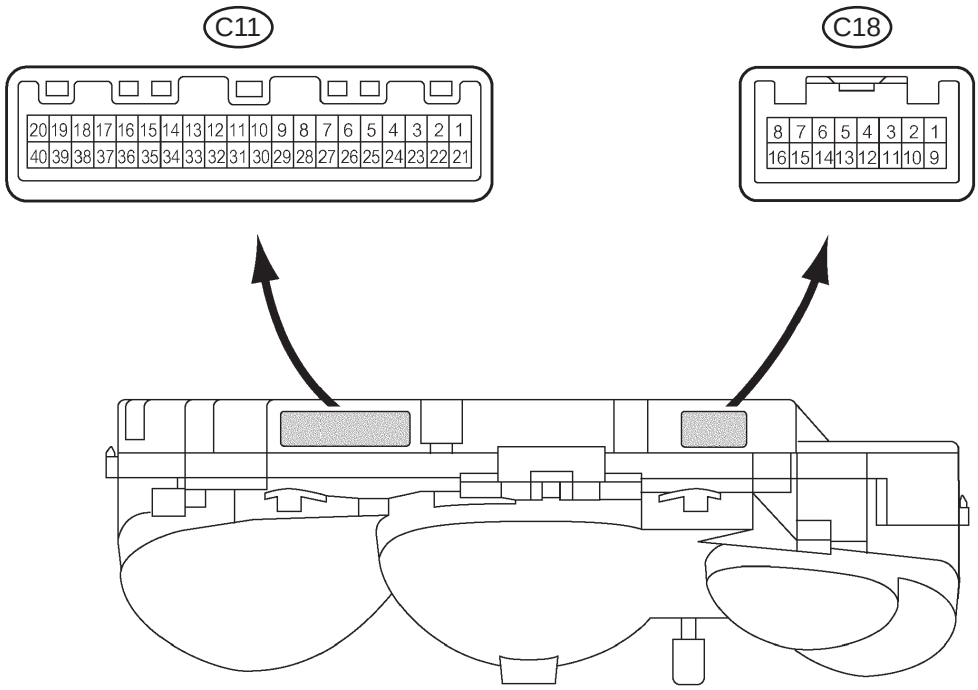

H

I042351E01

Symbols (Terminals No.)	Wiring Color	Terminal Description	Condition	Specified Condition
+B (C11-1) - Body ground	L-W - Body ground	Battery	Always	10 to 14 V
CHG+ (C11-2) - Body ground	B-O - Body ground	Charge signal	Engine running	Below 1 V
			Engine stopped	10 to 14 V
ST (C11-3) - Body ground	B - Body ground	Starting signal	Ignition switch OFF	Below 1 V
			Ignition switch ON	7 to 14 V
ILL+ (C11-4) - Body ground	G - Body ground	Tail light signal	Light control switch OFF	Below 1 V
			Light control switch ON	10 to 14 V
AIR BAG (C11-6) - Body ground	B-Y - Body ground	AIR BAG signal	AIR BAG warning light OFF	8 to 14 V
			AIR BAG warning light ON	Below 1 V
TAIL CANCEL (C11-7) - Body ground	B - Body ground	Tail cancel signal (Light control)	Tail cancel switch OFF	Below 1 V
			Tail cancel switch ON	10 to 14 V
ABS (C11-8) - Body ground	W-R - Body ground	ABS signal	ABS warning light ON	5 to 9 V
			ABS warning light OFF	Below 1 V
EBD (C11-9) - Body ground	R - Body ground	ABS or VSC signal	Brake warning light ON	5 to 9 V
			Brake warning light OFF	Below 1 V
OIL PRESSURE (C11-10) - Body ground	W - Body ground	Oil pressure signal	OIL/P warning light ON	Below 1 V
			OIL/P warning light OFF	10 to 14 V
CHG- (C11-11) - Body ground	Y - Body ground	Charge signal	Ignition switch OFF	10 to 14 V
			Ignition switch ON	Below 1 V
BRAKE LEVEL SW (C11-12) - Body ground	R-W - Body ground	Brake fluid level signal	Brake fluid level warning light OFF	Below 1 V
			Brake fluid level warning light ON	8 to 14 V

cardiagn.com

Symbols (Terminals No.)	Wiring Color	Terminal Description	Condition	Specified Condition
CRUISE (C11-14) - Body ground	G-R - Body ground	CRUISE signal	Ignition switch ON and cruise indicator light ON	Below 1 V
			Ignition switch ON and cruise indicator light OFF	10 to 14 V
KEY SW (C11-15) - Body ground	L-B - Body ground	KEY switch signal	Ignition key not inserted	Below 1 V → 10 to 14 V
CHECK ENGINE (C11-16) - Body ground	R-Y - Body ground	CHECK ENGINE signal	CHECK ENGINE warning light ON	Below 2 V
			CHECK ENGINE warning light OFF	8 to 14 V
4P OUT (C11-17) - Body ground	V-W - Body ground	Speed signal (Output)	Ignition switch ON and turn the wheel slowly	Pulse generation (See waveform 1)
SI (C11-18) - Body ground	W-G - Body ground	Speed signal (Input)	Ignition switch ON and turn the wheel slowly	Pulse generation (See waveform 1)
FUEL EARTH (C11-19) - Body ground	BR - Body ground	Ground (Fuel sender gauge)	Always	Below 1 Ω
SIGNAL EARTH (C11-20) - Body ground	BR - Body ground	Ground	Always	Below 1 Ω
IG1+ (C11-21) - Body ground	R-W - Body ground	Ignition switch signal (ON)	Ignition switch OFF	Below 1 V
			Ignition switch ON	10 to 14 V
BEAM+ (C11-22) - Body ground	R - Body ground	Hi-Beam signal	Hi-Beam OFF	Below 1 V
			Hi-Beam ON	10 to 14 V
TURN R (C11-23) - Body ground	G-Y - Body ground	Turn signal R	Ignition switch ON, turn signal RH indicator light OFF	Below 1 V
			Ignition switch ON, turn signal RH indicator light ON	10 to 14 V
TURN L (C11-24) - Body ground	G-B - Body ground	Turn signal L	Ignition switch ON, turn signal LH indicator light OFF	Below 1 V
			Ignition switch ON, turn signal LH indicator light ON	10 to 14 V
EXCEPT D DOOR (C11-25) - Body ground	R - Body ground	Door condition signal (Except for D door)	Except driver door OPEN	Below 1 V
			Except driver door CLOSE	10 to 14 V
D DOOR (C11-26) - Body ground	R-W - Body ground	D door condition signal	Driver door OPEN	Below 1 V
			Driver door CLOSE	10 to 14 V
TACHO (C11-27) - Body ground	B - Body ground	Tachometer signal	Engine running	Pulse generation (See waveform 2)
FUEL (C11-29) - Body ground	Y - Body ground	Fuel level signal	Ignition switch ON, fuel level is FULL	Below 1 V
			Ignition switch ON, fuel level is EMPTY	4 to 7 V
P-BELT OUT (C11-30) - Body ground	L - Body ground	Seat belt condition signal (Passenger side)	Passenger seat belt indicator light is OFF	10 to 14 V
			Passenger seat belt indicator light is Blinks	Below 1 V
D-BELT SW (C11-31) - Body ground	G-Y - Body ground	Seat belt condition signal (Driver Side)	Driver seat belt indicator light is Blinks	Below 1 V
			Driver seat belt indicator light is OFF	10 to 14 V
WASHER LEVEL (C11-32) (*1) - Body ground	L-W - Body ground	Washer level signal	WASH LVL indicator light OFF	10 to 14 V
			WASH LVL indicator light ON	Below 1 V
HEAD (C11-33) (*2) - Body ground	R - Body ground	Headlight signal	Light control switch is OFF	10 to 14 V
			Light control switch is HEAD	Below 1 V
BEAM- (C11-34) - Body ground	W-B - Body ground	Hi-Beam signal	Hi-Beam ON	10 to 14 V
			Hi-Beam OFF	Below 1 V

cardiagn.com

Symbols (Terminals No.)	Wiring Color	Terminal Description	Condition	Specified Condition
ILL- (C11-35) - Body ground	W-R - Body ground	Rheostat signal (Light control)	Light control dimmer switch is TAIL/HEAD	Pulse generation (See waveform 3)
TEMP (C11-36) - Body ground	Y-R - Body ground	Coolant temperature signal	Ignition switch ON, coolant temperature is 80 to 95°C (176 to 203°F)	Pulse generation (See waveform 4)
P-BELT SW (C11-37) - Body ground	L-W - Body ground	Seat belt condition signal	P-BELT indicator light ON	10 to 14 V
			P-BELT indicator light OFF	Below 1 V
OUTSIDE TEMP+ (C11-38) - OUTSIDE TEMP- (C11-39)	B - B-L	Outside temp signal	Outside temperature at 25°C (77°F)	Approx. 2,784 Ω
POWER EARTH (C11-40) - Body ground	W-B - Body ground	Ground	Always	Below 1 Ω
VSC (C18-1) - Body ground	V - Body ground	VSC signal	VSC indicator light ON	Below 1 V
			VSC indicator light OFF	10 to 14 V
SLIP (C18-3) - Body ground	W - Body ground	SLIP signal	SLIP indicator light ON	Below 1 V
			SLIP indicator light OFF	10 to 14 V
O/D OFF (C18-4) - Body ground	LG - Body ground	O/D OFF signal	O/D OFF indicator light OFF	10 to 14 V
			O/D OFF indicator light ON	Below 1 V
TPMS (C18-6) - Body ground	LG - Body ground	TPMS signal	TPMS indicator light ON	6.7 to 12 V
			TPMS indicator light OFF	Below 1 V
OUTSIDE TEMP OUT (C18-8) - Body ground	R - Body ground	Outside temp signal	Ignition switch ON	Pulse generation (See waveform 5)

ME

*1: Canada
*2: U.S.A.

(a) Waveform 1 (Reference):

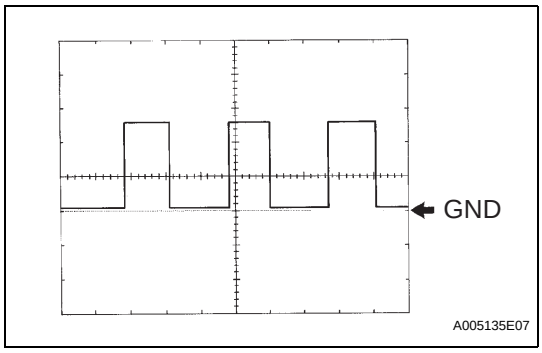

Item	Condition
Tool setting	5 V/DIV., 20 ms/DIV.
Vehicle condition	Driving at approx. 20 km/h (12 mph)

HINT:
As vehicle speed increases, the cycle of the signal waveform narrows.

(b) Waveform 2 (Reference):

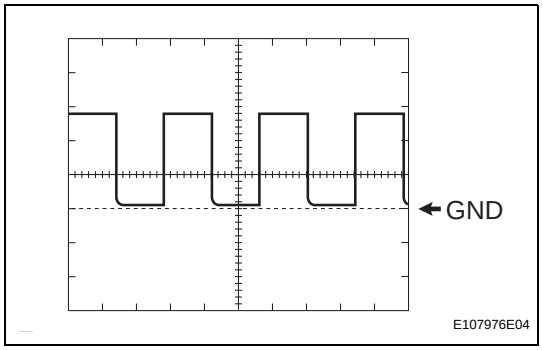

Item	Condition
Tool setting	5 V/DIV., 10 ms/DIV.
Vehicle condition	Engine idle speed

cardiagn.com

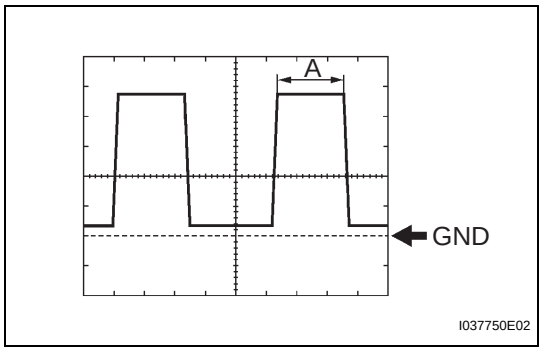

(c) Waveform 3 (Reference):

Item	Condition
Tool setting	2 V/DIV., 1 ms/DIV.
Vehicle condition	Ignition switch ON

HINT:
Duty ratio changes as illumination becomes darker ("A" becomes longer).

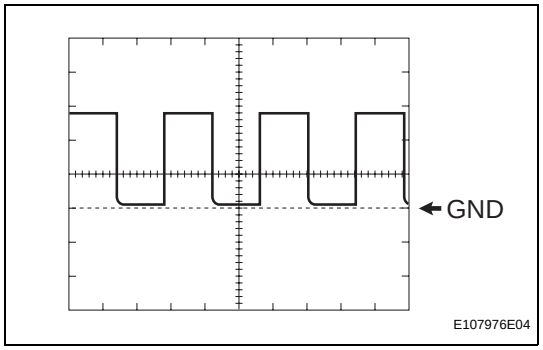

(d) Waveform 4 (Reference):

Item	Condition
Tool setting	5 V/DIV., 100 ms/DIV.
Vehicle condition	Ignition switch ON

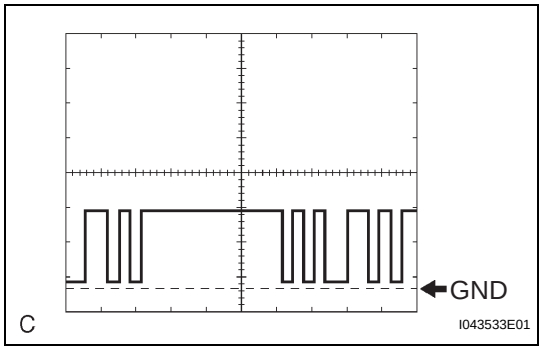

(e) Waveform 5 (Reference):

Item	Condition
Tool setting	5 V/DIV., 100 ms/DIV.
Vehicle condition	Ignition switch ON

cardiagn.com

2. COMBINATION METER INNER CIRCUIT

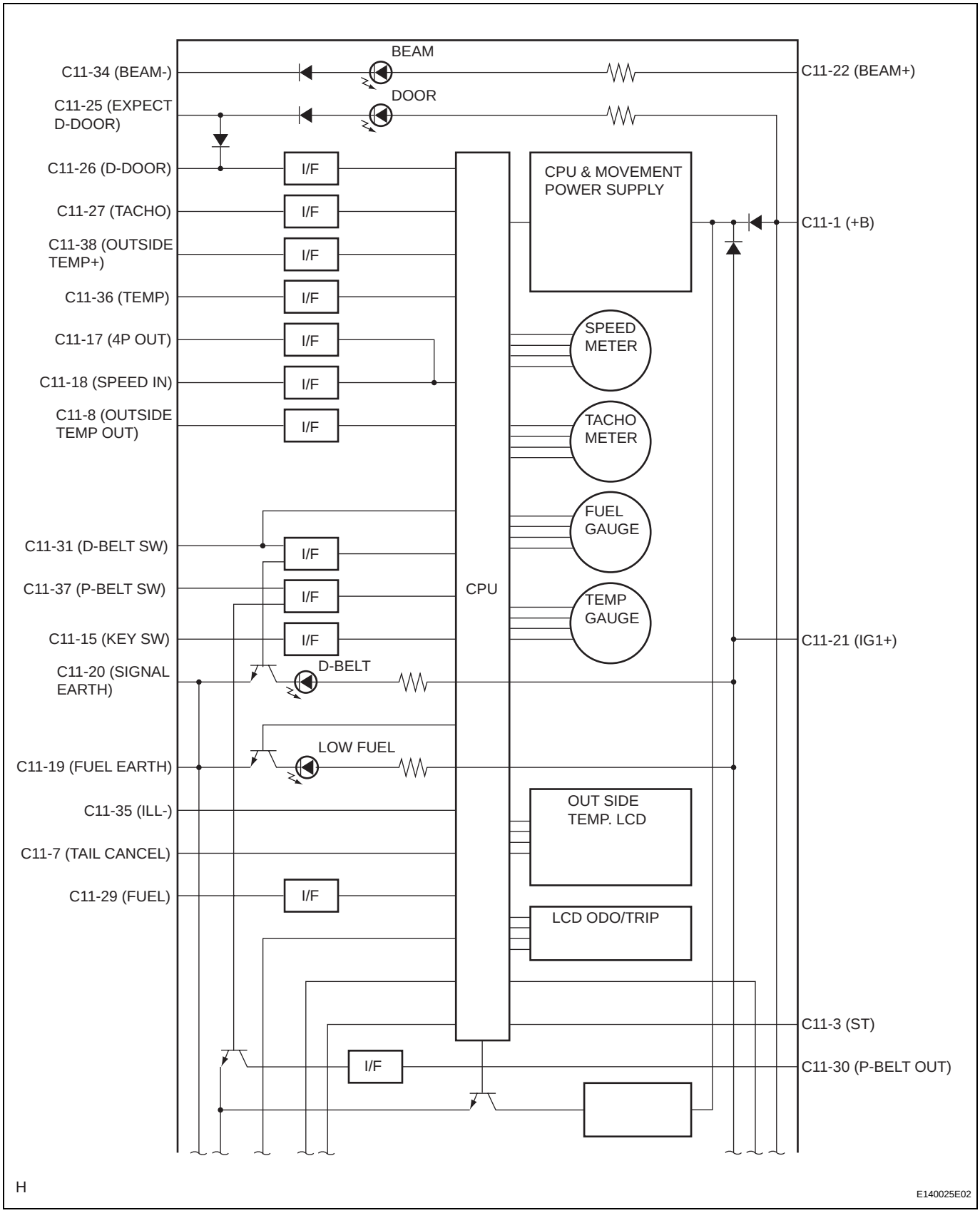

ME

cardiagn.com

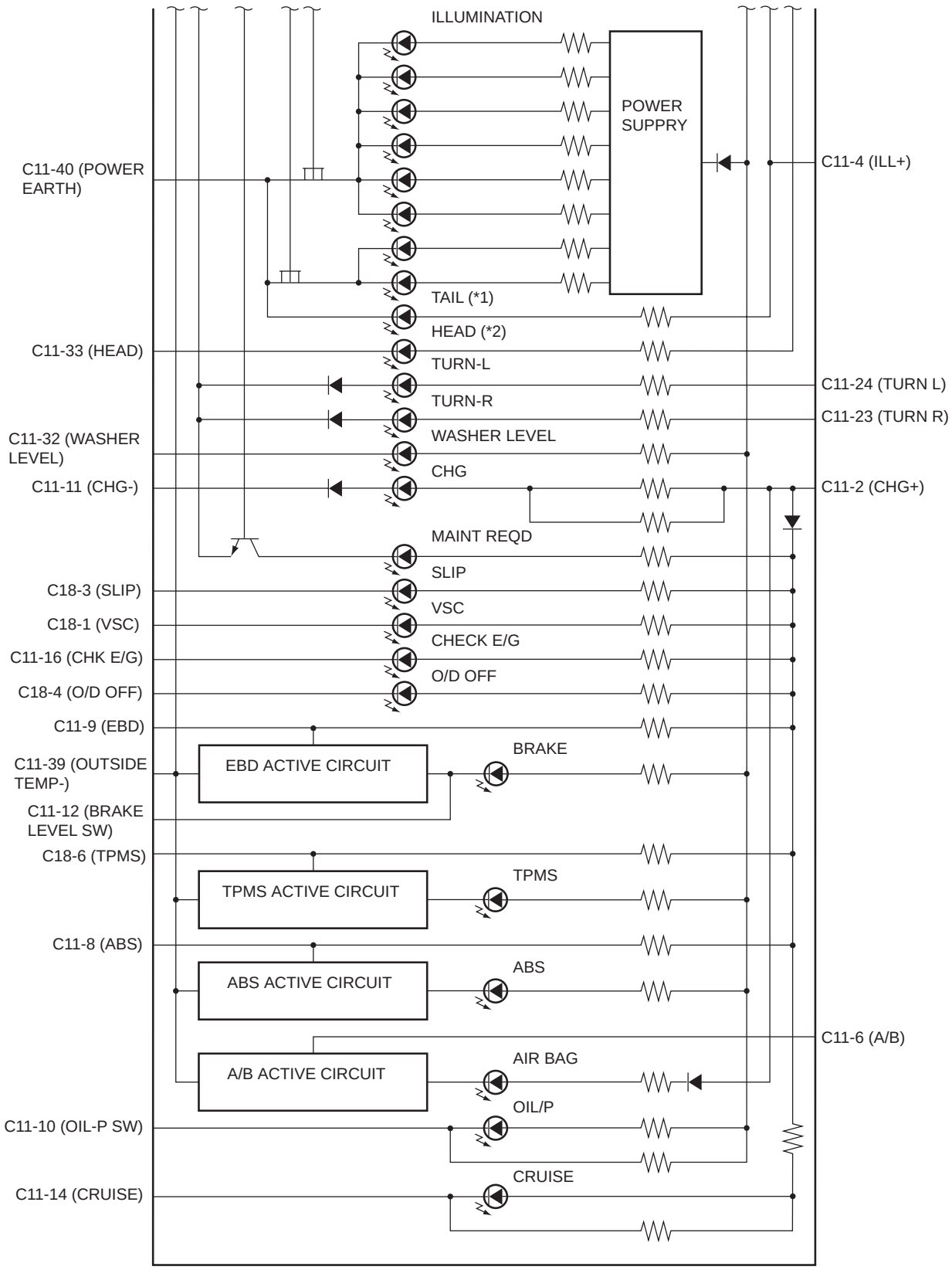

(*1): CANADA

(*2): U.S.A.

H

E116225E01

ME

cardiagn.com

Terminal No.		Wire harness side
C11	1	DOME Fuse
	2	AM2 Fuse
	3	Clutch Start Switch (M/T), Park/Neutral Position Switch (A/T)
	4	Light Control Switch, Tail Relay
	5	-
	6	Airbag Sensor Assembly Center
	7	Light Control Rheostat
	8	Brake Actuator Assembly (with ABS), VSC & Traction Actuator Assembly (with VSC)
	9	Brake Actuator Assembly (with ABS), VSC & Traction Actuator Assembly (with VSC)
	10	Engine Oil Pressure Switch
	11	Generator
	12	Brake Fluid Level Warning Switch, Parking Brake Switch (without ABS)
	13	-
	14	ECM
	15	Unlock Warning Switch Assembly
	16	ECM
	17	Radio and Player (with Navigation), ECM, ECM Integration Relay
	18	Brake Actuator Assembly (with ABS), VSC & Traction Actuator Assembly (with VSC), Vehicle Speed Sensor (without ABS)
	19	Fuel Sender Gauge Assembly
	20	Ground (Signal Ground)
	21	GAUGE Fuse
	22	Headlight Dimmer Switch
	23	Turn Signal Flasher (R)
	24	Turn Signal Flasher (L)
	25	Door Courtesy Light Switch Assembly (Except Driver Side)
	26	Door Courtesy Light Switch Assembly (Driver Side)
	27	ECM
	28	-
	29	Fuel Sender Gauge Assembly
	30	Front Passenger Seat Belt Warning Light
	31	Front Seat Inner Belt Assembly (Driver Side)
	32	Washer Level Sensor
	33	DRL Relay
	34	Headlight Dimmer Switch (Ground)
	35	Light Control Rheostat
	36	ECM
	37	Occupant Detection Sensor
	38	Ambient Temperature Sensor
	39	Ambient Temperature Sensor
	40	Ground (Power Ground)

cardiagn.com

Terminal No.		Wire harness side
C18	1	VSC & Traction Actuator Assembly (with VSC)
	2	-
	3	VSC & Traction Actuator Assembly (with VSC)
	4	O/D Off Switch
	5	-
	6	Brake Actuator Assembly (with ABS), VSC & Traction Actuator Assembly (with VSC)
	7	-
	8	ECM
	9	-
	10	-
	11	-
	12	-
	13	-
	14	-
	15	-
	16	-

cardiagn.com